FIRMUS SERIES
CNC CENTERLESS GRINDER

Santos y Patxi Servicio Técnico S.L.
Parque Empresarial ESSER Nave SE-5
20850 Mendaro (Guipúzcoa) España
Tlf. 943741658 Fax. 943742346
Email. santosjose@santosypatxi.com
Wed. www.santosypatxi.com

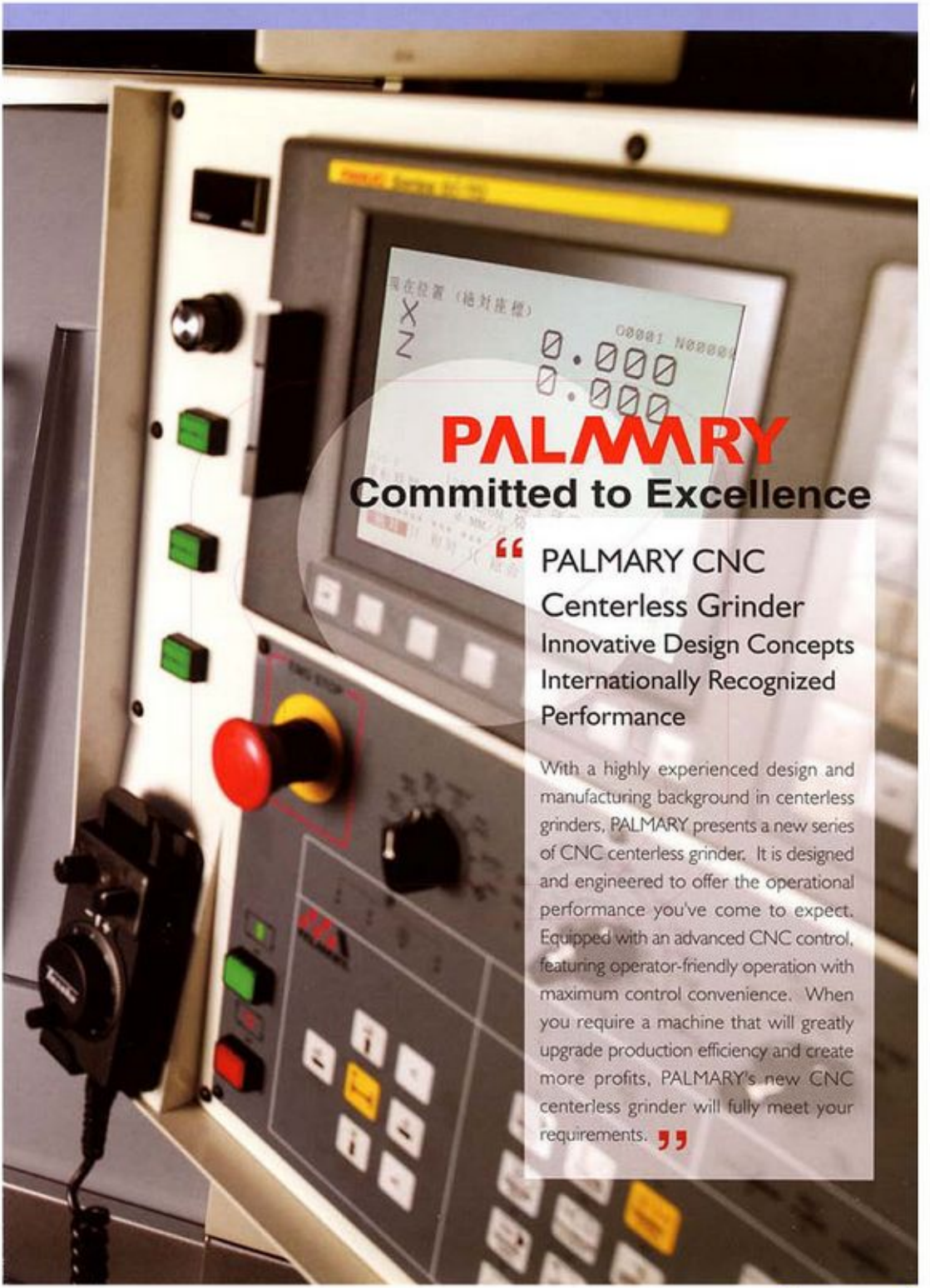

PALMARY

Committed to Excellence

PALMARY CNC Centerless Grinder

Innovative Design Concepts
Internationally Recognized Performance

"With a highly experienced design and manufacturing background in centerless grinders, PALMARY presents a new series of CNC centerless grinder. It is designed and engineered to offer the operational performance you've come to expect. Equipped with an advanced CNC control, featuring operator-friendly operation with maximum control convenience. When you require a machine that will greatly upgrade production efficiency and create more profits, PALMARY's new CNC centerless grinder will fully meet your requirements."

S & P

PALMARY FIRMUS Series Sets a New

FCL-18-4

- 4 axes servo drive
- CNC control
- Grinding range (standard) Ø1 – Ø60 mm
- Grinding wheel sizes Ø455 x 205 x Ø228.6 mm

FCL-1812-3

- 3 axes servo drive
- CNC control
- Grinding range (standard) Ø1 – Ø60 mm
- Grinding wheel sizes Ø455 x 305 x Ø228.6 mm

S & P

Performance Standard

FCL-12-1

- One axis servo drive
- CNC control
- Grinding range (standard) Ø1 ~ Ø40 mm
- Grinding wheel sizes Ø305 x 150 x Ø120 mm

FCL-1810-1

- One axis servo drive
- CNC control
- Grinding range (standard) Ø1 ~ Ø60 mm
- Grinding wheel sizes Ø455 x 255 x 228.6 mm

S & P

Optimal Machine Structure Design.
Maximum Rigidity and Stability.

High Precision.
Deformation-free for Life.

"To ensure that each CNC centerless grinder from PALMARY maintains the best possible precision and stability, PALMARY R&D staff employ the most advanced structural design concepts. They conduct a deep structure analysis for the stress/strain conditions. Outstanding structure reinforcement design is combined with thorough stress relief to ensure that PALMARY's centerless grinders always present the perfect machining condition even after years of operation."

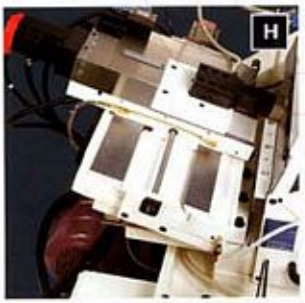

Stable Grinding Wheel Auto. Dressing Unit (For 1 Axis above)

The lower slideways of the grinding wheel dressing unit is of a concave dovetail structure. This combines with extra large sideways for greatly upgrading the stability of the grinding wheel unit.

Lubrication Collector

Lubrication oil for all slideways flow return through brass tubes to oil collecting tanks. This not only helps to maintain a clean working area, but also meets ISO-14000 environmental protection requirements.

Dresser for Regulating wheel & Grinding Wheel (For 1 Axis)

- Dresser structure is manufactured from alloy cast iron and is heat treated for wear resistance.
- Hydraulically operated dressing motion.
- Variable dressing speed.
- Dresser stand for regulating wheel can be adjusted to suit workpiece requirements, assuring high cylindrical accuracy.

S & P

“The CNC centerless grinder from PALMARY fully presents high accuracy, high efficiency and user-friendly operational performance.”

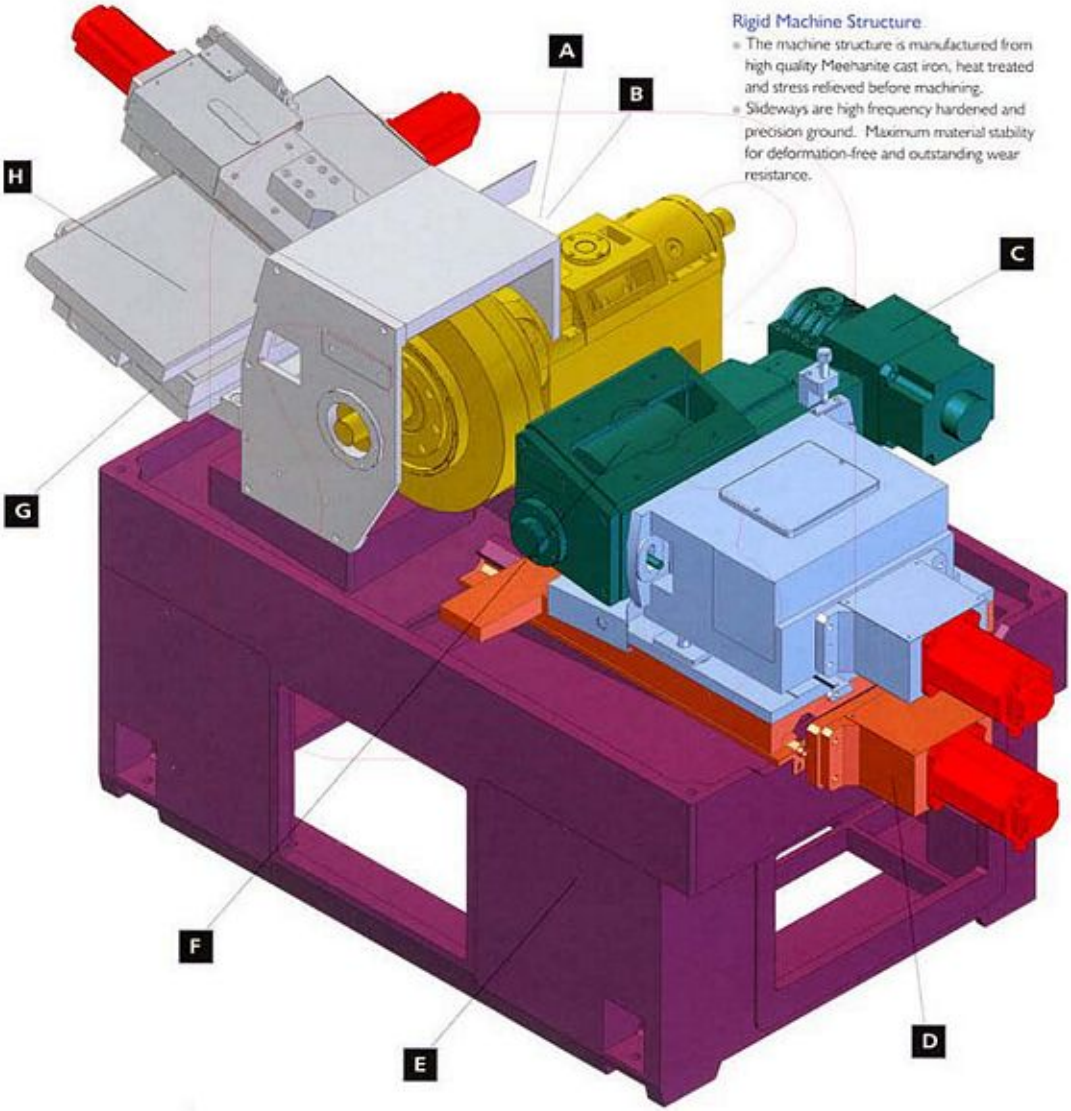

Rigid Machine Structure

- The machine structure is manufactured from high quality Meehanite cast iron, heat treated and stress relieved before machining.
- Slideways are high frequency hardened and precision ground. Maximum material stability for deformation-free and outstanding wear resistance.

S & P

Hydraulic Cooling Device

- The lubrication system for bearings on grinding wheel spindle, regulating wheel spindle and hydraulic system are driven by the same hydraulic pump. A cooling fan is equipped for effectively reducing oil temperature.

Pressure Switch

- When starting the grinding wheel and regulating wheel spindle, this pressure switch allows starting only when oil enters into bearings thereby providing safety protection for the spindle bearings.

Regulating wheel is driven by AC servo motor.

Precision Slideways Smooth Feed

Lubrication System

- The automatic lubricator provides lubrication to the grinding wheel spindle.
- All slideways are lubricated by a centralized lubrication system, ensuring proper lubrication and feeding accuracy.

Slide Table

- Upper slide swiveling is easy and accurate to adjust for making the machine suitable for infeeding grinding. Also, it allows grinding for a varied diameter of workpieces. The Upper slide with +5° ~ -5° swiveling allows taper grinding by using infeed grinding mode.
- With thrufeed grinding, the upper slide provides a surface contact adjustment between the workpiece and grinding wheel. Swiveling adjustment range is +5° ~ -3°.
- Dovetailed slideway on the upper slide features smooth and accurate feeding and is lubricated by a centralized lubricator.
- Lower slide moves on "Λ" shaped and double-wedged ways. The slideways are hardened and precision ground. They feature smooth movement and properly protected to prevent dust from entering. Micro. feed adjustment unit is 0.001 mm to meet high accuracy requirements for all workpieces.
- The slideways on the slide unit are coated with Turcite-B for superior wear resistance and smooth movement.

S & P

PALMARY CNC Centerless Grinder

State-of- the-Art Manufacturing Technique Quality Guaranteed

"Insisting on quality is a tradition at PALMARY. Each part is subject to rigorous quality control before entering the machine assembly line. Our highly skilled assembly technicians pay special care to every detail during assembly. A good deal of time is spent on dynamic operation tests, conducted before each machine leaves our factory. This is done to ensure that each PALMARY machine offers the perfect operational performance."

- Latest digital servo technology
- Easy to operate
- Excellent for efficient grinding applications
- Convenient editing
- Complete software package

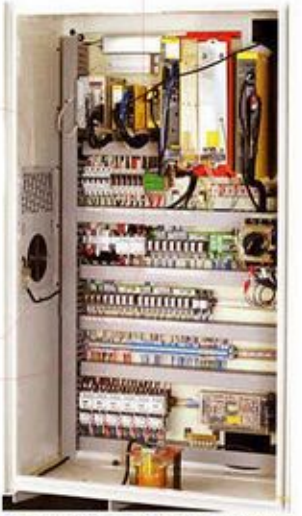

Control Circuit Meets European Standards

- The control circuit consists of high quality electronic components, featuring dependable control performance and long service life.
- The electric cabinet is equipped with a heat exchanger, providing a constant temperature for the control circuit and maximum stability of control performance.
- The electric cabinet is dust-proof.

S & P

CNC Control (ALL SLIDES CONTROLLED BY CNC)

Z Axis : Grinding wheel auto. dressing (vertical) , FCL-12/18 0.75 kw
Y Axis : Grinding wheel auto. dressing (horizontal) , FCL-12/18 0.75 kw
A Axis : Regulating wheel auto. dressing (vertical) , FCL-12/18 0.75 kw
B Axis : Regulating wheel auto. dressing (horizontal) , FCL-12/18 0.75 kw
C Axis : Regulating wheel upper slide auto. infeed , FCL-12/18 1.2 kw
X Axis : Regulating wheel lower slide auto. infeed , FCL-12 1.2 kw , FCL-18 1.8 kw

Axial Combination:

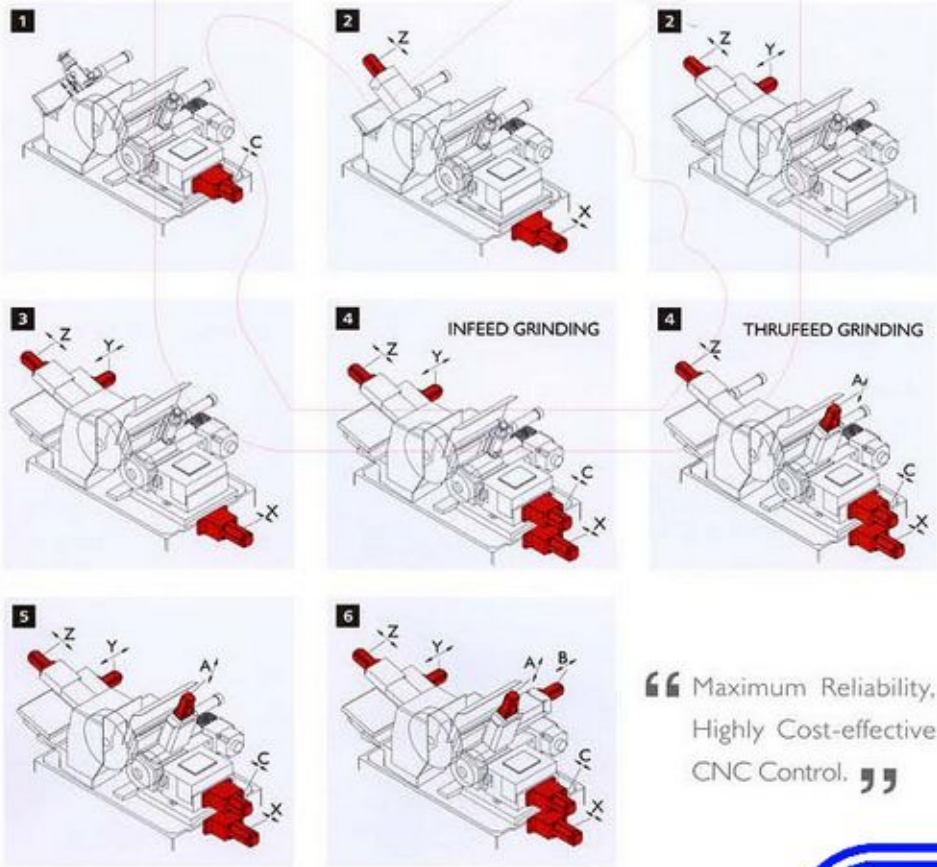

"Maximum Reliability, Highly Cost-effective CNC Control."

S & P

S & P

Precision Spindles

- The grinding wheel spindle and the regulating wheel spindle are precision machined from Nickel Chromolybedenum alloy steel (SNCM-220). Also, they are subject to various treatments such as: normalized, tempered and carburized hardening. Then, the spindles are thru sub-zero treated - under zero degrees, precision ground and precision machined.
- The inside of spindle is tempered to hardness HRC 25°–30°, while surface hardness reaches over HRC 62. The precision ground spindle is excellent for heavy-duty machining and features powerful torque, long service life, deformation-free and maximum wear resistance.

PALMARY Centerless Grinder
Designed for Upgrading your Competitive Edge

"The PALMARY Centerless grinder employs advanced CNC control, providing powerful functions and is easy operate. Precision construction throughout guarantees high parts accuracy. It's a machine that will boost your production efficiency and competitive edge."

Automatic Unloading Equipment for Thrufeed Grinding (Optional)

- Designed for automatic unloading for round tubes and bar stock. This equipment avoids workpiece surface scratching. It is also suitable for online operation while performing two to three grinding processes. The conveyor is easy to adjust. Equipped with a parts tray for convenient parts collection after grinding.

Auto Loading and Unloading Equipment for Infeed Grinding (Optional)

- It employs a robot arm to pick workpieces from the tray and place them into the machine for grinding. The other robot arm picks the finished workpieces and places them on the collection tray. This equipment provides a fully automatic grinding operation that saves labor while enormously upgrading production efficiency.

Automatic Loading Equipment for Thrufeed Grinding (Optional)

- Suitable for automatic loading operations for round tubes and bar stock.
- Equipped with a storage tray for automatic workpiece infeed.
- It eliminates manual workpiece infeed while enormously increasing total efficiency.

S & P

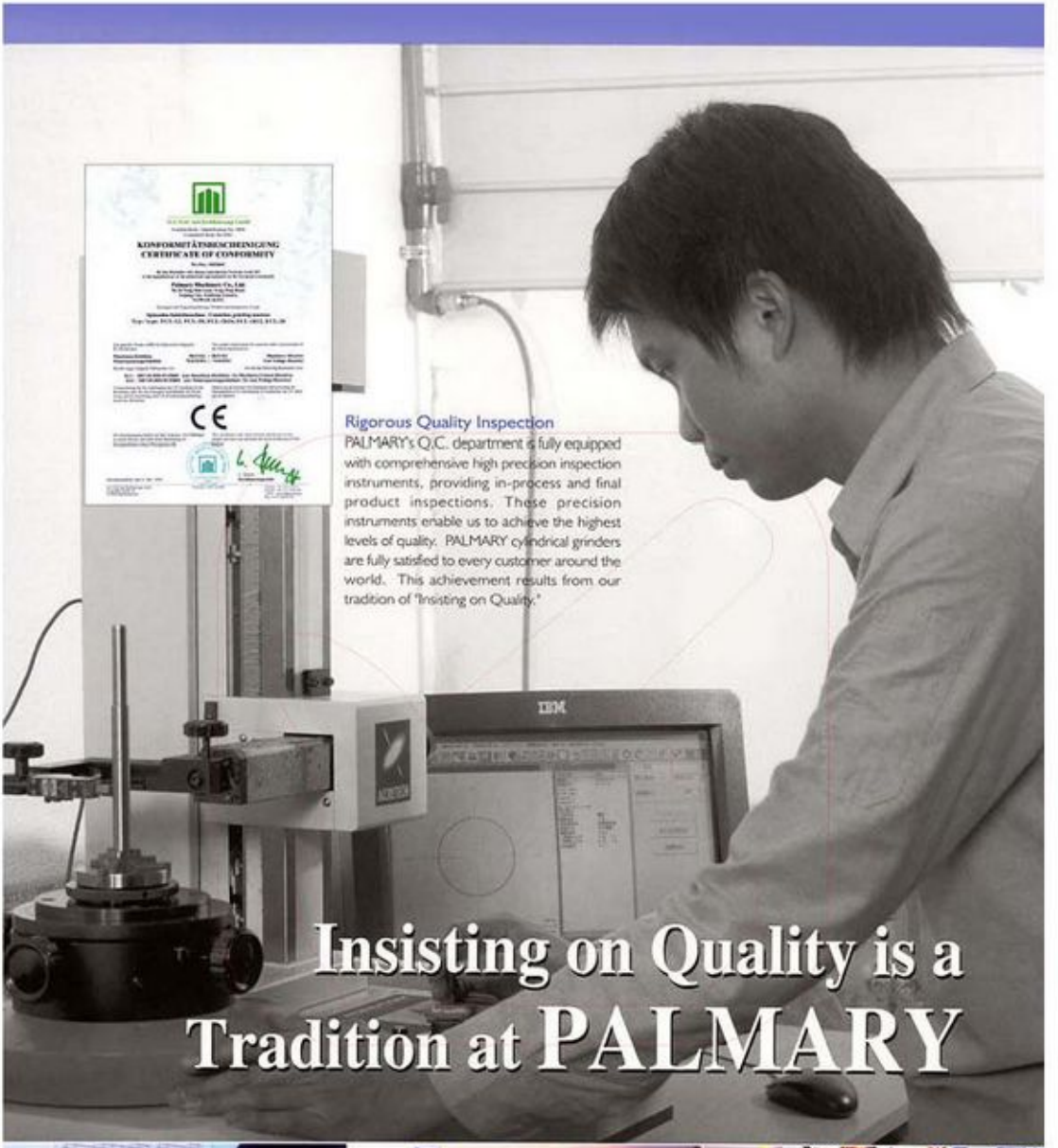

Rigorous Quality Inspection

PALMARY's Q.C. department is fully equipped with comprehensive high precision inspection instruments, providing in-process and final product inspections. These precision instruments enable us to achieve the highest levels of quality. PALMARY cylindrical grinders are fully satisfied to every customer around the world. This achievement results from our tradition of "Insisting on Quality."

Insisting on Quality is a Tradition at PALMARY

S & P

Grinding Test Report

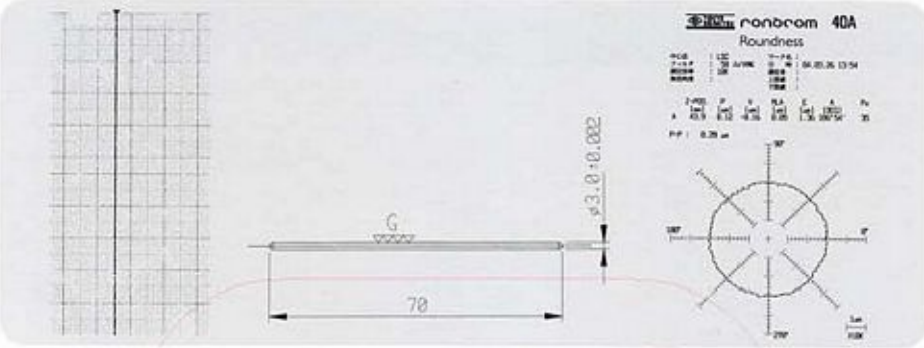

Work sample	Motor shaft	Stock Removal	
Grinding wheel	GC100KV	Δ 1st rough	0.15
Peripheral speed	2,000 M/min	Δ 2nd fine	0.025
Workpiece material	SUS430	Δ 3rd finish	0.02
Roundness	0.6 μm (stock removal 0.15)	Feed Speed	2.6 M/min
Cylindricity	2 μm	Surface Finish	Ra = 0.18 μm
			Rz = 0.85 μm

Automation Process

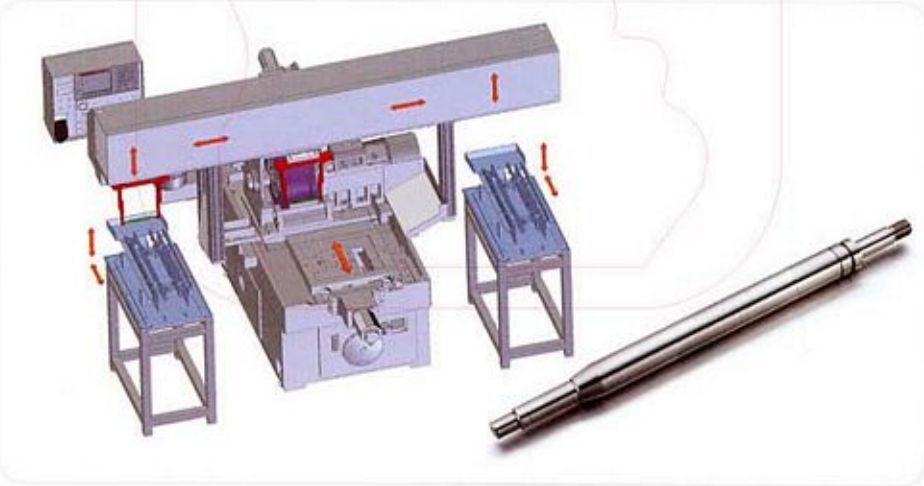

Work sample	shaft	Cycle time	22 sec.
Material	S45C	Stock removal	0.05 mm/dia.
Grinding wheel	WA80L	Roundness	1 μ
Peripheral speed	2,000 M/min	Cylindricity	1.5 μ
Regulating wheel	A120R	Surface finish	0.3 Ra
Regulating wheel speed	35 rpm		

S & P

Carbide Blade for Both Thrufeed and Infeed Grinding (Selection Table)

Workpiece	Carbide Blade Thickness	Workpiece	Carbide Blade Thickness FCL-12	FCL-18
1.5 - 2.5m/m	t=1 m/m	8.1 - 10 m/m	t=6 m/m for Ø10	t=6 m/m for Ø10
2.6 - 4.0m/m	t=2 m/m	10.1 - 16 m/m	t=8 m/m for Ø16	t=8 m/m for Ø16
4.1 - 5.0m/m	t=3 m/m	12 - 20 m/m	t=8 m/m for Ø20	t=10 m/m for Ø20
5.1 - 7m/m	t=4 m/m	15 - 30 m/m	t=13 m/m for Ø30	t=13 m/m for Ø30
7.1 - 8m/m	t=5 m/m	25 - 50 m/m	t=20 m/m for Ø40	t=20 m/m for Ø50

Standard Accessories:

1. Regulating wheel and flange x 1 set (mounted on machine)

2. Grinding wheel and flange x 1 set (mounted on machine)

3. CNC Control x 1 set

4. Infeed work rest x 1 set and carbide blade x 1 pcs

5. Thrufeed work rest x 1 set and carbide blade x 1 pcs

6. Standard coolant system x 1 set

7. Diamond tools x 2 pcs (mounted on machine)

8. Work lamp x 1 set (mounted on machine)

9. Tool box and kits x 1 set

S & P

Optional Accessories:

1. Wheel balancing stand and arbor

2. Manual feeder for infeed grinding (up and down)

3. Hydraulic work ejector (infeed grinding)

4. Automatic loading attachment (thrufeed grinding) (Ø 5-20 mm, L100-600 mm)

5. Automatic feeder for thrufeed grinding (hopper type) (Ø 2-8 mm, L50-180 mm)

6. Automatic unloading attachment (thrufeed grinding)

7. Supporter for long bar grinding

8. Magnetic coolant separator

9. Magnetic with paper filter

10. Hydrocyclone coolant separator

11. Auto. loading and unloading attachment (infeed grinding)

12. Vibratory feeder (thrufeed grinding)

13. Large work rest (thrufeed grinding) L: 250 - 500mm

S & P

Dimensions and Floor Occupation

FCL-12

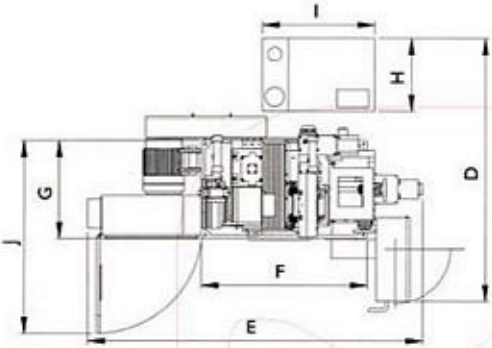

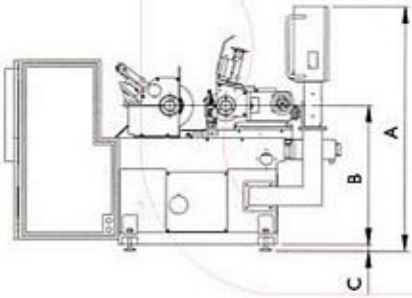

FCL-18 / 1810 / 1812 / 20

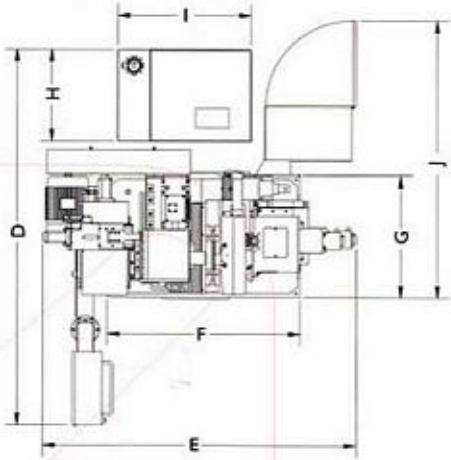

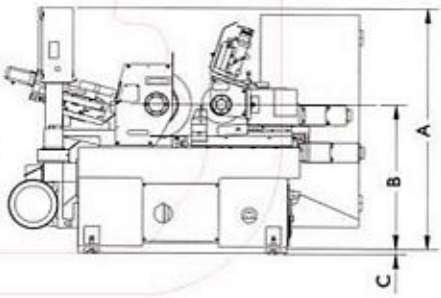

Model	A	B	C	D	E	F	G	H	I	J
FCL-12	1620	935	30	1750	2195	1085	655	490	735	1295
FCL-18 / FCL-1810	1650	960	30	2860	2360	1450	925	700	1000	2100
FCL-1812 / FCL-20	1650	960	30	3000	2360	1560	1070	700	1000	2250

S & P

SPECIFICATIONS	FCL-12	FCL-18	FCL-1810	FCL-1812	FCL-20
Grinding Wheel					
Standard grinding range (Dia.)	Ø1~Ø40 mm	Ø1~Ø60 mm	Ø1~Ø60 mm	Ø1~Ø60 mm	Ø1~Ø60 mm
Capacity increases with special arrangement	Ø30~Ø60 mm	Ø40~Ø150 mm	Ø40~Ø150 mm	Ø40~Ø150 mm	Ø40~Ø150 mm
Grinding wheel size (O.D. x width x I.D.)	Ø305 x 150 x Ø120	Ø455 x 205 x Ø228.6	Ø455 x 255 x Ø228.6	Ø455 x 305 x Ø228.6	Ø510 x 205 x Ø304.8
Grinding wheel speed	1900 R.P.M.	1500 R.P.M.	1500 R.P.M.	1500 R.P.M.	1200 R.P.M.
Grinding wheel motor	7 1/2 HP x 4P	15 HP x 4P	15 HP x 4P	20 HP x 4P	20 HP x 4P
Regulating Wheel					
Regulating wheel size (O.D. x width x I.D.)	Ø205 x 150 x Ø90	Ø255 x 205 x Ø111.2	Ø255 x255 x Ø111.2	Ø255 x 305 x Ø111.2	Ø305 x205 x Ø127
Regulating wheel speed	10~300 R.P.M.(Variable)	10~300 R.P.M.(Variable)	10~300 R.P.M.(Variable)	10~300 R.P.M.(Variable)	10~300 R.P.M.(Variable)
Regulating wheel motor	1.5 KW servo motor	3.5 KW servo motor	3.5 KW servo motor	3.5 KW servo motor	3.5 KW servo motor
Regulating wheel tilt angle	+5°~-3°	+5°~-3°	+5°~-3°	+5°~-3°	+5°~-3°
Regulating wheel swivel angle	±5°	±5°	±5°	±5°	±5°
Handwheel Graduation					
Upper slide feed graduation	4 mm/rev. 0.025 mm/graduation	3.5 mm/rev. 0.05 mm/graduation	3.5 mm/rev. 0.05 mm/graduation	3.5 mm/rev. 0.05 mm/graduation	3.5 mm/rev. 0.05 mm/graduation
Upper slide micro-feed graduation	0.1 mm/rev. 0.001 mm/graduation	0.1 mm/rev. 0.001 mm/graduation	0.1 mm/rev. 0.001 mm/graduation	0.1 mm/rev. 0.001 mm/graduation	0.1 mm/rev. 0.001 mm/graduation
Lower slide feed graduation	7 mm/rev. 0.05 mm/graduation	9 mm/rev. 0.05 mm/graduation	9 mm/rev. 0.05 mm/graduation	9 mm/rev. 0.05 mm/graduation	9 mm/rev. 0.05 mm/graduation
Lower slide micro-feed graduation	0.2 mm/rev. 0.001 mm/graduation	0.2 mm/rev. 0.001 mm/graduation	0.2 mm/rev. 0.001 mm/graduation	0.2 mm/rev. 0.001 mm/graduation	0.2 mm/rev. 0.001 mm/graduation
Trimming device graduation	2 mm/rev. 0.01 mm/graduation	2 mm/rev. 0.01 mm/graduation	2 mm/rev. 0.01 mm/graduation	2 mm/rev. 0.01 mm/graduation	2 mm/rev. 0.01 mm/graduation
Drive Motors					
Hydraulic pump motor	1 HP x 4P	1 HP x 4P	1 HP x 4P	1 HP x 4P	1 HP x 4P
Coolant pump motor	1/8 HP x 2P	1/4 HP x 2P	1/4 HP x 2P	1/4 HP x 2P	1/4 HP x 2P
Net weight	1700 kgs	2900 kgs	3000 kgs	3400 kgs	3700 kgs
Gross weight	2000 kgs	3200 kgs	3300 kgs	3700 kgs	4000 kgs

S & P